DATE APRIL 6, 2007	OUTLINE DIMENSIONS	MOTOR TYPE:
CATALOG NO.	3-PHASE INDUCTION MOTOR	FRAME NO. 324TC

Pole	HP	KW	Hz	VOLT	Syn. Speed r/min(rpm)

Ins	Rating	Dimension in	Approx Weight	Bearings	
F	CONT.	inches	715 LBS	DE: 6312	NDE: 6212

Totally Enclosed Fan Cooled Type. Squirrel-cage Rotor.

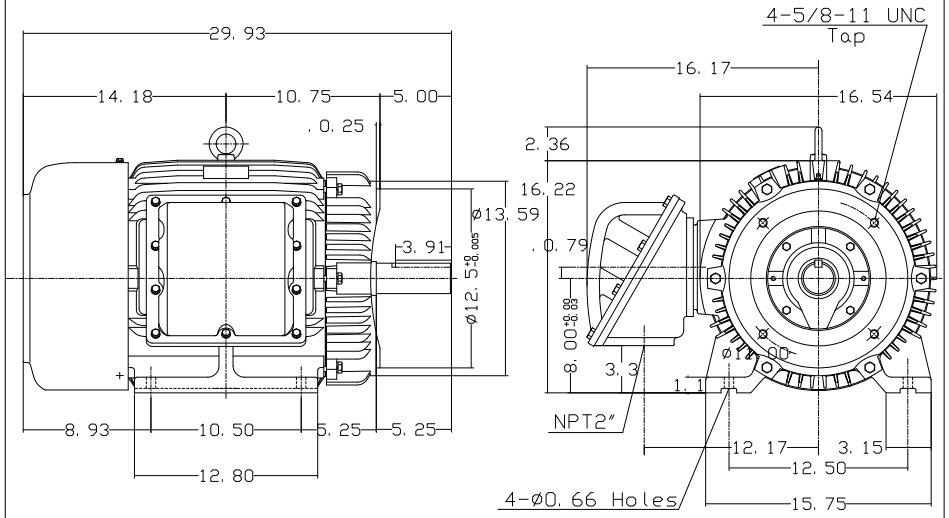

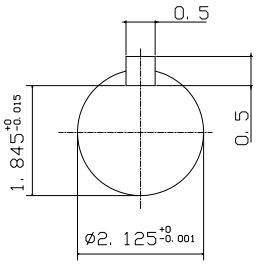

Note:
1. Explosion proof:
   Class I Group D and
   Class II Groud E. F. G.

DWN.		11·30·00	BROOK CROMPTON
CHKD.		03·07·01	
APPD.		03·07·01	

DWG NO.